SECTION 7
SCHEMATICS

7.1 INTRODUCTION

This section contains all schematics for the instrument. A schematic index is given in Section 7.3.

7.2 SCHEMATIC NOTES

The following notes and abbreviations pertain to all schematics. Additional notes pertaining to specific schematics are included on each schematic if required.

Unless otherwise noted, resistor values are given in ohms, capacitor values are given in pF, and inductor values are given in μH.

SYMBOL NOTES

2	Denotes DC voltage reading unless otherwise specified.
22 MV	Denotes high-impedance crystal detector reading in volts unless otherwise specified.
12	Denotes 50 ohm crystal detector reading in volts unless otherwise specified.
18	Signal or voltage source.
18	Connects to indicated signal or voltage source.
	Arrow indicates clockwise rotation of wiper.
	Coaxial jack
	Coaxial plug
	Coaxial cable
✳	Factory adjusted part.
LEVEL	Denotes a front-panel device.
LEVEL RP	Denotes a rear-panel device.
LEVEL	Denotes a printed circuit board adjustment or accessible module adjustment.
(LEVEL)	Denotes an internal module adjustment not accessible without removing module cover.

ABBREVIATION CODE

A	ampere
AC	alternating current
C	capacitor
ccw	counterclockwise
CR	diode
CW	continuous wave
cw	clockwise
dB	decibel
dBc	dB referred to carrier
dBm	dB referred to 1 mW
dBmV	dB referred to 1 mV
DC	direct current
DS	indicating device, lamp
F	farad
F.P.	front panel
H	henry
Hz	hertz
IC	integrated circuit
IF	intermediate frequency
J	jack
K	relay
kHz	kilohertz
kΩ	kilohm
kV	kilovolt
kW	kilowatt
L	inductor
M	meter
MHz	megahertz
MΩ	megohm
mA	milliampere
mH	millihenry
mV	millivolt
mW	milliwatt
μF	microfarad
μA	microampere
μH	microhenry
Ω	ohm
OC	opto-coupler
P	plug
p	peak
pp	peak-to-peak
pF	picofarad
Q	transistor
R	resistor
RF	radio frequency
RMS	root-mean-square
R.P.	rear panel
S	switch
T	transformer
T.P.	test point
V	volt
VA	voltampere
W	watt
X	crystal

7.3 SCHEMATIC INDEX

The schematics appear in the following order.

ASSEMBLY	NAME
1403/1503	Wiring Diagram
PS7	Power Supply
M2E-2	Sweep Drive
M5D	Marker Adder
M7E	L.O. Tracking
M8E	Automatic Level
M9JA	Sweep Oscillator
M9S-1	Sweep Oscillator
M11E	Automatic Frequency
M6H-1	Harmonic Marker (1 MHz)
M6H-5-50	Harmonic Marker (5-50 MHz)
M6S	Single Freq. Marker
RB	Amplifier Probe

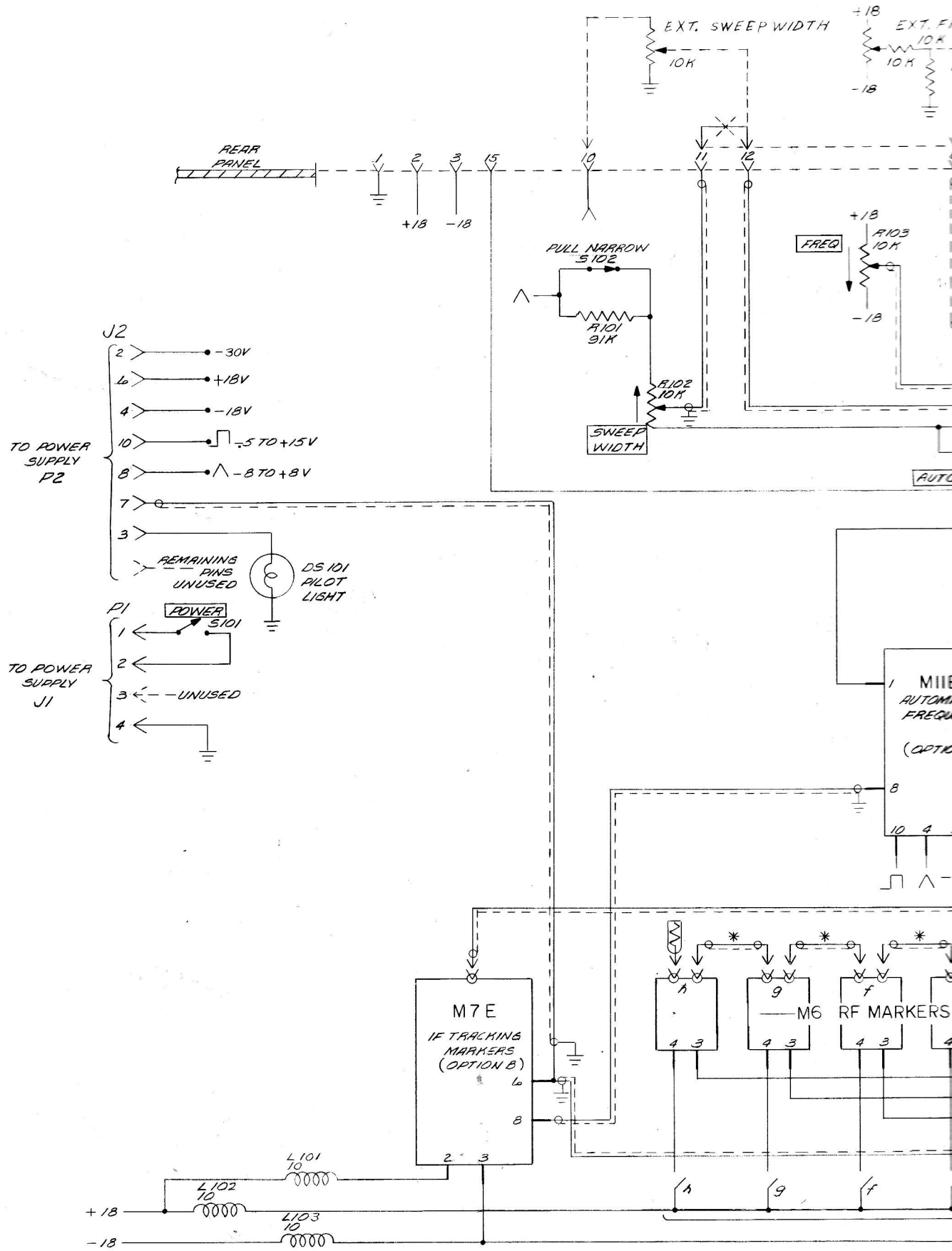
EXT. SWEEP WIDTH
10K
+18
-18
REAR PANEL
1
2
3
15
10
11
12
+18
-18
PULL NARROW
S102
R101
91K
R102
10K
SWEEP WIDTH
FREQ
R103
10K
J2
2
6
4
10
8
7
3
-30V
+18V
-18V
-5 TO +15V
-8 TO +8V
TO POWER SUPPLY P2
REMAINING PINS UNUSED
DS 101
PILOT LIGHT
P1
POWER
S101
1
2
3
4
TO POWER SUPPLY J1
UNUSED
M7E
IF TRACKING MARKERS (OPTION 8)
M6
RF MARKERS
L101
10
L102
10
L103
10
+18
-18

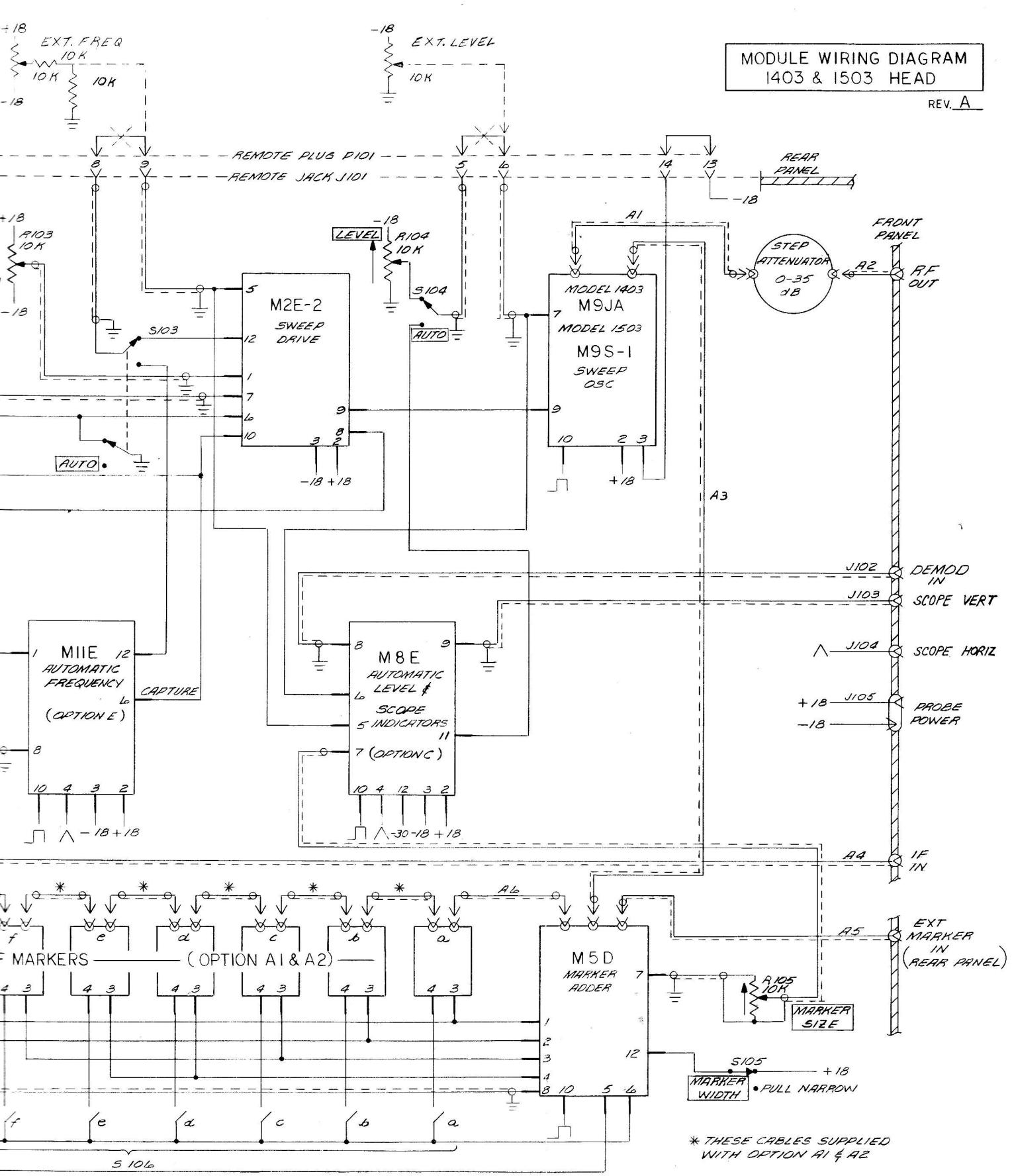
MODULE WIRING DIAGRAM
1403 & 1503 HEAD
REV. A
EXT. FREQ
10K
EXT. LEVEL
REMOTE PLUG P101
REMOTE JACK J101
REAR PANEL
FRONT PANEL
R103 10K
LEVEL
R104 10K
S104
AUTO
S103
M2E-2
SWEEP DRIVE
MODEL 1403
M9JA
MODEL 1503
M9S-1
SWEEP OSC
STEP ATTENUATOR 0-35 dB
A1
A2
A3
A4
A5
A6
R.F. OUT
J102
DEMOD IN
J103
SCOPE VERT
J104
SCOPE HORIZ
J105
PROBE POWER
M11E
AUTOMATIC FREQUENCY
(OPTION E)
CAPTURE
M8E
AUTOMATIC LEVEL & SCOPE INDICATORS
(OPTION C)
IF IN
EXT MARKER IN (REAR PANEL)
MARKERS (OPTION A1 & A2)
M5D
MARKER ADDER
R105 10K
MARKER SIZE
S105
MARKER WIDTH
PULL NARROW
S106
* THESE CABLES SUPPLIED WITH OPTION A1 & A2

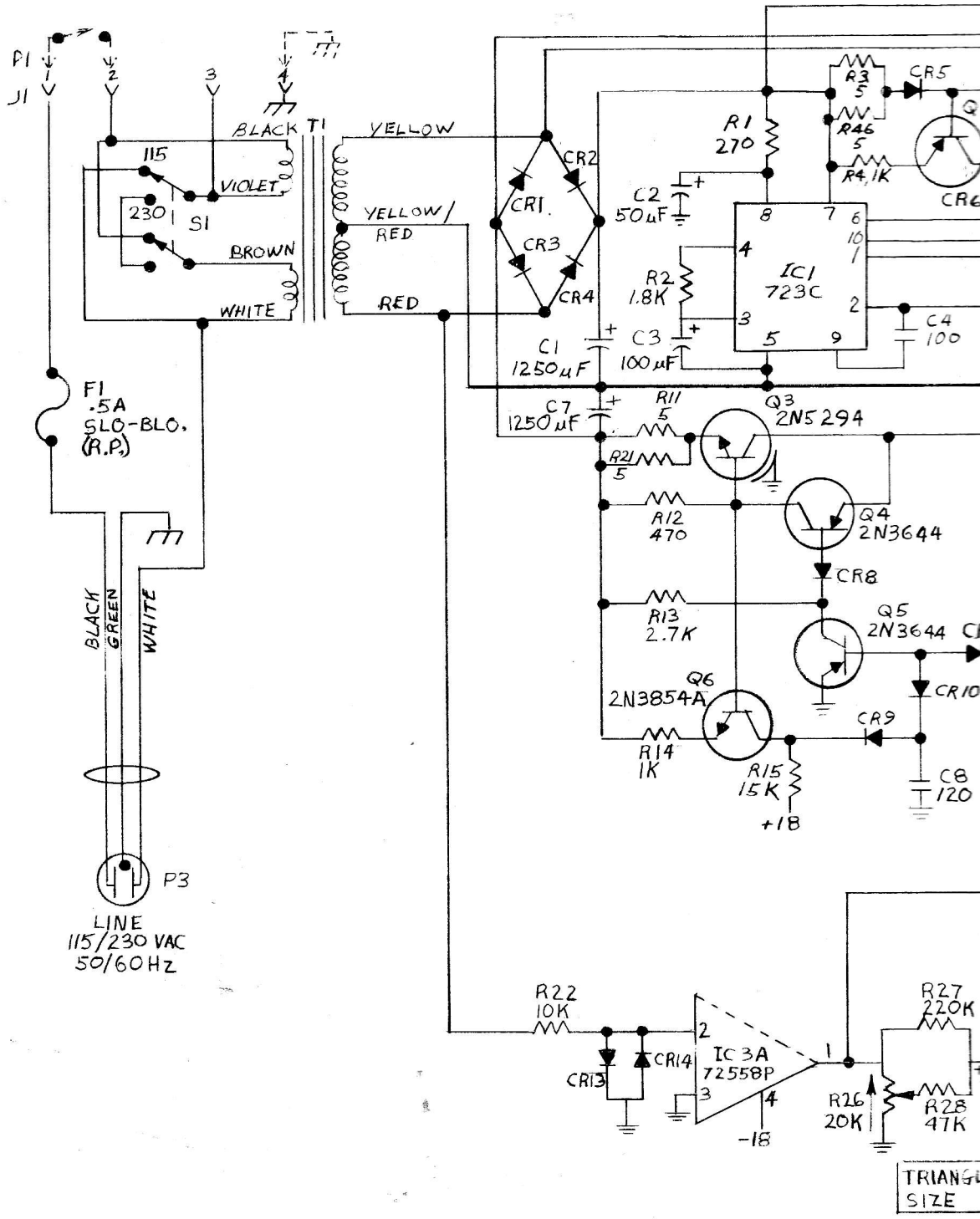
P1
J1
2
3
4
BLACK
T1
YELLOW
115
VIOLET
230
S1
YELLOW/
RED
BROWN
WHITE
RED
CR1
CR2
CR3
CR4
C1
1250µF
C2
50µF
C3
100µF
R1
270
R2
1.8K
IC1
723C
R3
5
R46
5
R4, 1K
CR5
CR6
C4
100
F1
.5A
SLO-BLO.
(R.P.)
C7
1250µF
R11
5
R21
5
Q3
2N5294
R12
470
Q4
2N3644
CR8
R13
2.7K
Q5
2N3644
CR10
Q6
2N3854A
CR9
R14
1K
R15
15K
+18
C8
120
BLACK
GREEN
WHITE
P3
LINE
115/230 VAC
50/60Hz
R22
10K
CR13
CR14
IC3A
72558P
-18
R26
20K
R27
220K
R28
47K
TRIANGL
SIZE

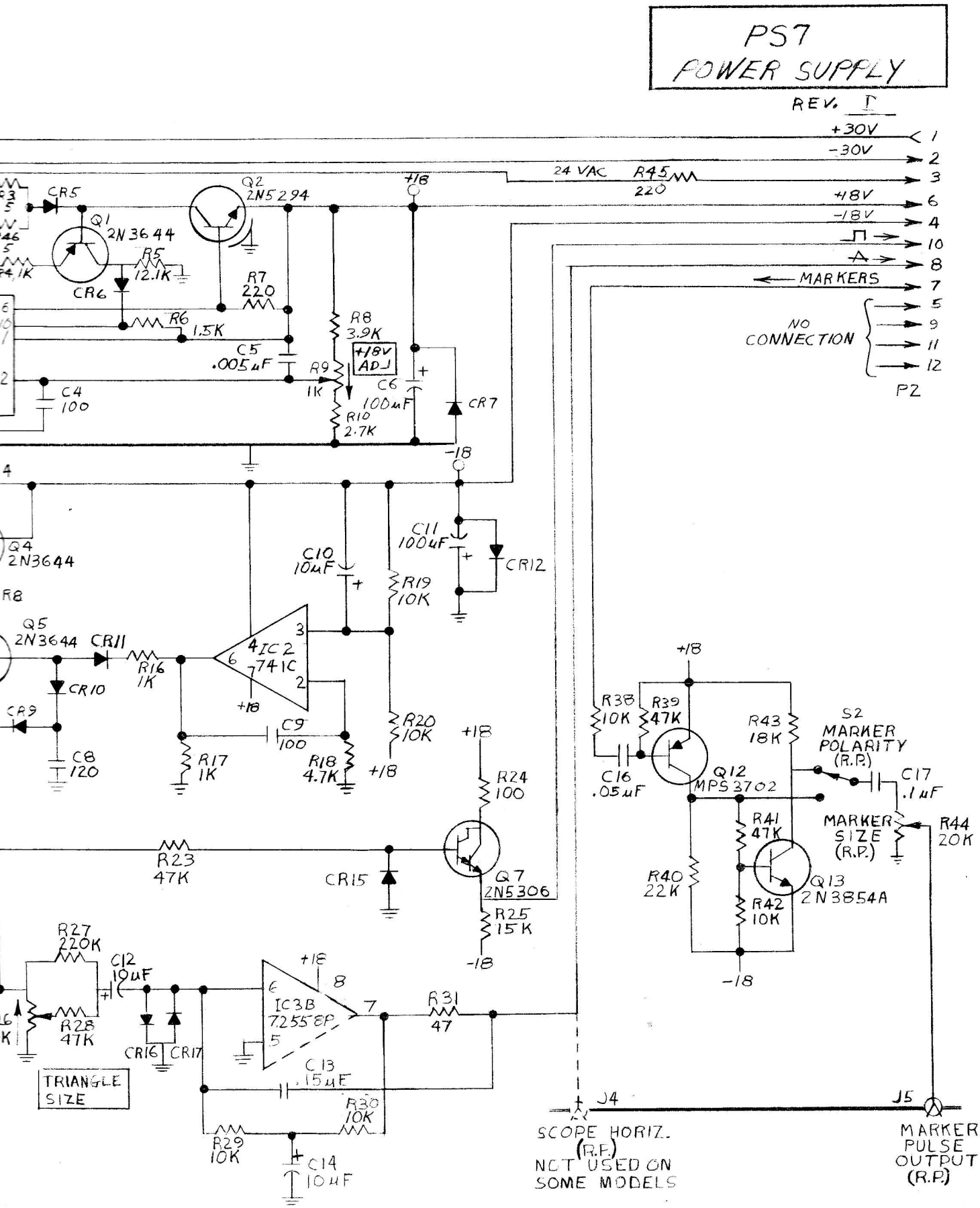
PS7
POWER SUPPLY
REV. I
+30V
-30V
24 VAC
R45
220
+18V
-18V
MARKERS
NO CONNECTION
P2
CR5
Q1
2N3644
Q2
2N5294
R5
12.1K
CR6
R7
220
R6
1.5K
C5
.005µF
R8
3.9K
+18V ADJ
R9
1K
R10
2.7K
C6
100µF
CR7
C4
100
C11
100µF
CR12
C10
10µF
R19
10K
Q4
2N3644
Q5
2N3644
CR11
R16
1K
CR10
CR9
C8
120
IC2
741C
C9
100
R17
1K
R18
4.7K
R20
10K
R24
100
R23
47K
CR15
Q7
2N5306
R25
15K
R38
10K
R39
47K
C16
.05µF
Q12
MPS3702
R43
18K
S2
MARKER POLARITY (R.P.)
C17
.1µF
MARKER SIZE (R.P.)
R44
20K
R41
47K
R40
22K
Q13
2N3854A
R42
10K
R27
220K
C12
10µF
R28
47K
CR16
CR17
IC3B
7255EP
R31
47
C13
.15µF
R30
10K
R29
10K
C14
10µF
TRIANGLE SIZE
J4
SCOPE HORIZ. (R.P.) NOT USED ON SOME MODELS
J5
MARKER PULSE OUTPUT (R.P.)

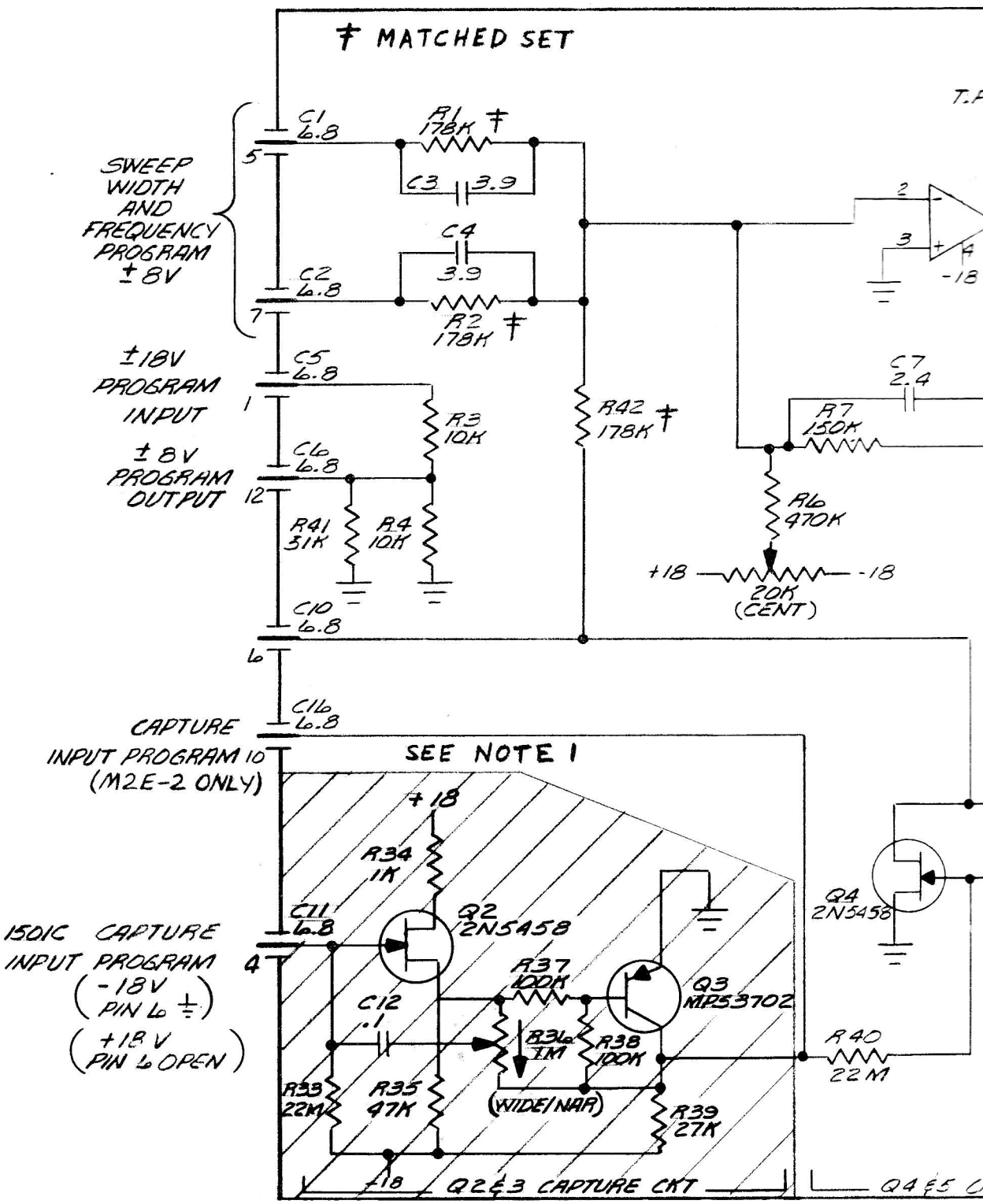
‡ MATCHED SET
SWEEP WIDTH AND FREQUENCY PROGRAM ±8V
C1 6.8
R1 178K ‡
C3 3.9
C4 3.9
C2 6.8
R2 178K ‡
±18V PROGRAM INPUT
C5 6.8
R3 10K
±8V PROGRAM OUTPUT
C6 6.8
R41 31K
R4 10K
C10 6.8
R42 178K ‡
C7 2.4
R7 150K
R6 470K
+18
-18
20K (CENT)
C16 6.8
CAPTURE INPUT PROGRAM (M2E-2 ONLY)
SEE NOTE 1
+18
R34 1K
C11 6.8
Q2 2N5458
150IC CAPTURE INPUT PROGRAM (-18V PIN 6 ⏚) (+18 V PIN 6 OPEN)
R37 100K
Q3 MPS3702
C12 .1
R36 1M
R38 100K
(WIDE/NAR)
R33 22M
R35 47K
R39 27K
Q2 & 3 CAPTURE CKT
Q4 2N5458
R40 22M

M2E, M2E-1, M2E-2 SWEEP DRIVE

REV. C

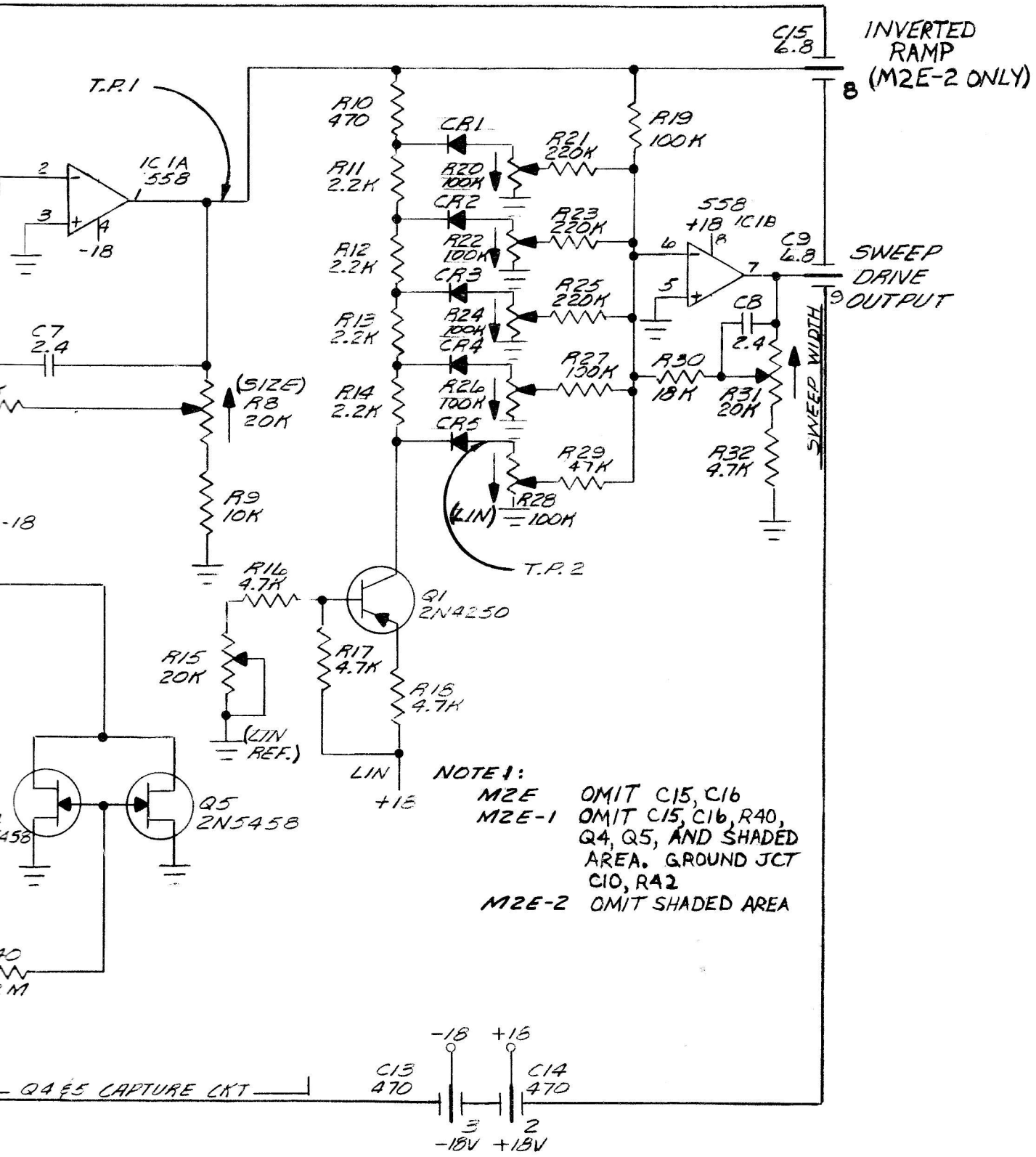

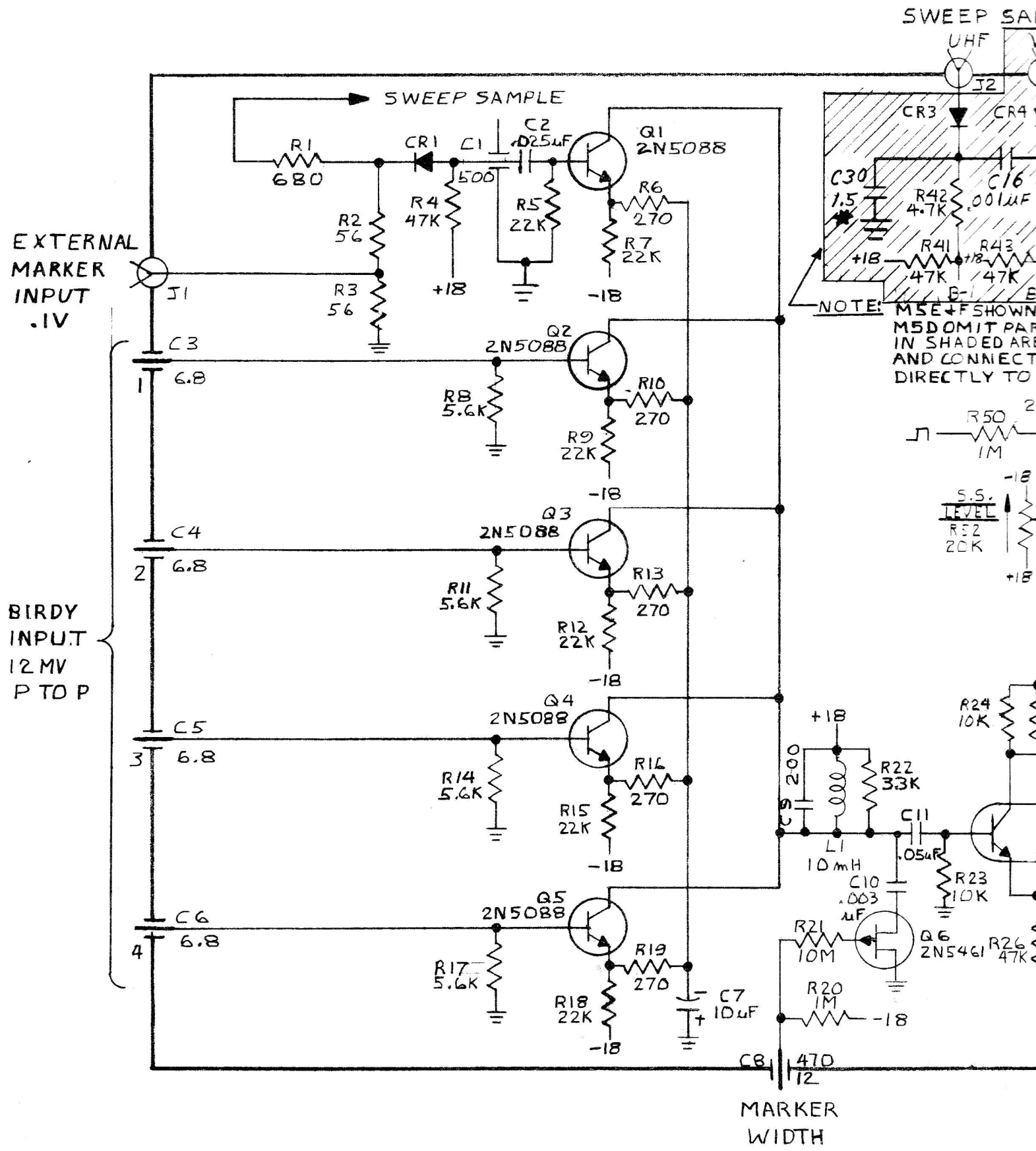
SWEEP SAMPLE
R1
680
CR1
C1
500
C2
.025uF
Q1
2N5088
R6
270
R7
22K
R2
56
R3
56
R4
47K
R5
22K
+18
-18
EXTERNAL
MARKER
INPUT
.1V
J1
C3
6.8
Q2
2N5088
R8
5.6K
R10
270
R9
22K
C4
6.8
Q3
2N5088
R11
5.6K
R13
270
R12
22K
BIRDY
INPUT
12 MV
P TO P
C5
6.8
Q4
2N5088
R14
5.6K
R16
270
R15
22K
C6
6.8
Q5
2N5088
R17
5.6K
R19
270
R18
22K
C7
10uF
C8
470
12
MARKER
WIDTH
SWEEP SA
UHF
J2
CR3
CR4
C30
1.5
R42
4.7K
C16
.001uF
R41
47K
R43
47K
NOTE:
M5E+F SHOWN
M5D OMIT PA
IN SHADED ARE
AND CONNECT
DIRECTLY TO
R50
1M
S.S.
LEVEL
R52
20K
R24
10K
R22
33K
C9
200
L1
10mH
C11
.054uF
C10
.003
uF
R23
10K
R21
10M
Q6
2N5461
R26
47K
R20
1M

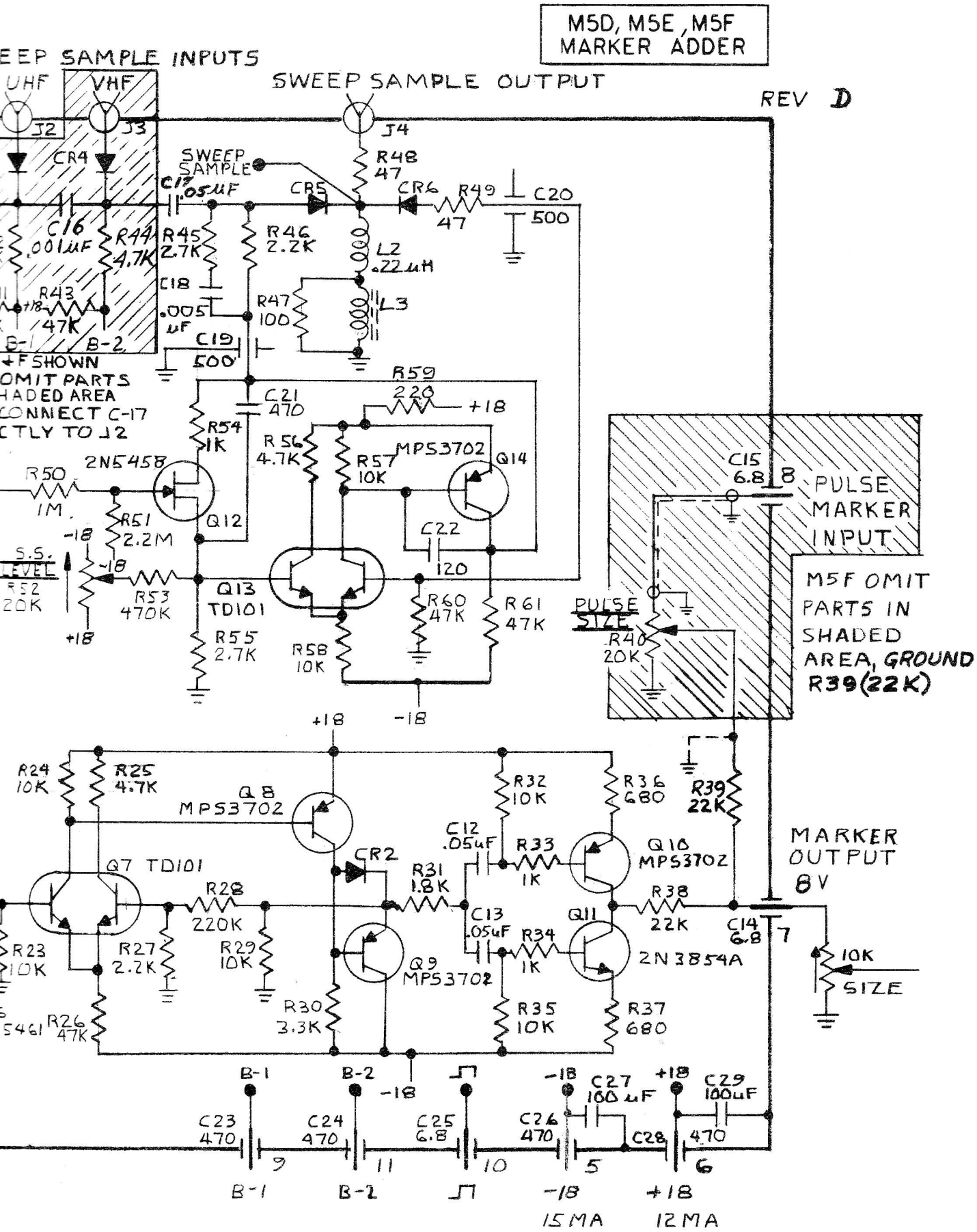
M5D, M5E, M5F
MARKER ADDER
REV D
EEP SAMPLE INPUTS
UHF
VHF
J2
J3
CR4
SWEEP SAMPLE OUTPUT
J4
SWEEP SAMPLE
C17 .05uF
CR5
CR6
R48 47
R49 47
C20 500
C16 .001uF
R44 4.7K
R45 2.7K
R46 2.2K
L2 .22uH
C18 .005 uF
R47 100
L3
R43 47K
B-1
B-2
C19 500
+F SHOWN
OMIT PARTS
HADED AREA
CONNECT C-17
CTLY TO J2
R59 220
+18
C21 470
R54 1K
R56 4.7K
R57 10K
MP53702
Q14
2N5458
R50 1M
R51 2.2M
Q12
C22 120
S.S. LEVEL
R52 20K
R53 470K
Q13 TD101
R60 47K
R61 47K
R55 2.7K
R58 10K
-18
C15 6.8
8
PULSE MARKER INPUT
M5F OMIT PARTS IN SHADED AREA, GROUND R39(22K)
PULSE SIZE
R40 20K
R24 10K
R25 4.7K
Q8 MP53702
R32 10K
R36 680
R39 22K
C12 .054uF
R33 1K
Q10 MP53702
MARKER OUTPUT 8V
Q7 TD101
CR2
R31 1.8K
R28 220K
C13 .054uF
R34 1K
Q11 2N3854A
R38 22K
C14 6.8
7
10K SIZE
R23 10K
R27 2.2K
R29 10K
Q9 MP53702
R30 3.3K
R35 10K
R37 680
R26 47K
C23 470
C24 470
C25 6.8
C26 470
C27 100 uF
C28 470
C29 100uF
9
11
10
5
6
B-1
B-2
-18
+18
15 MA
12 MA

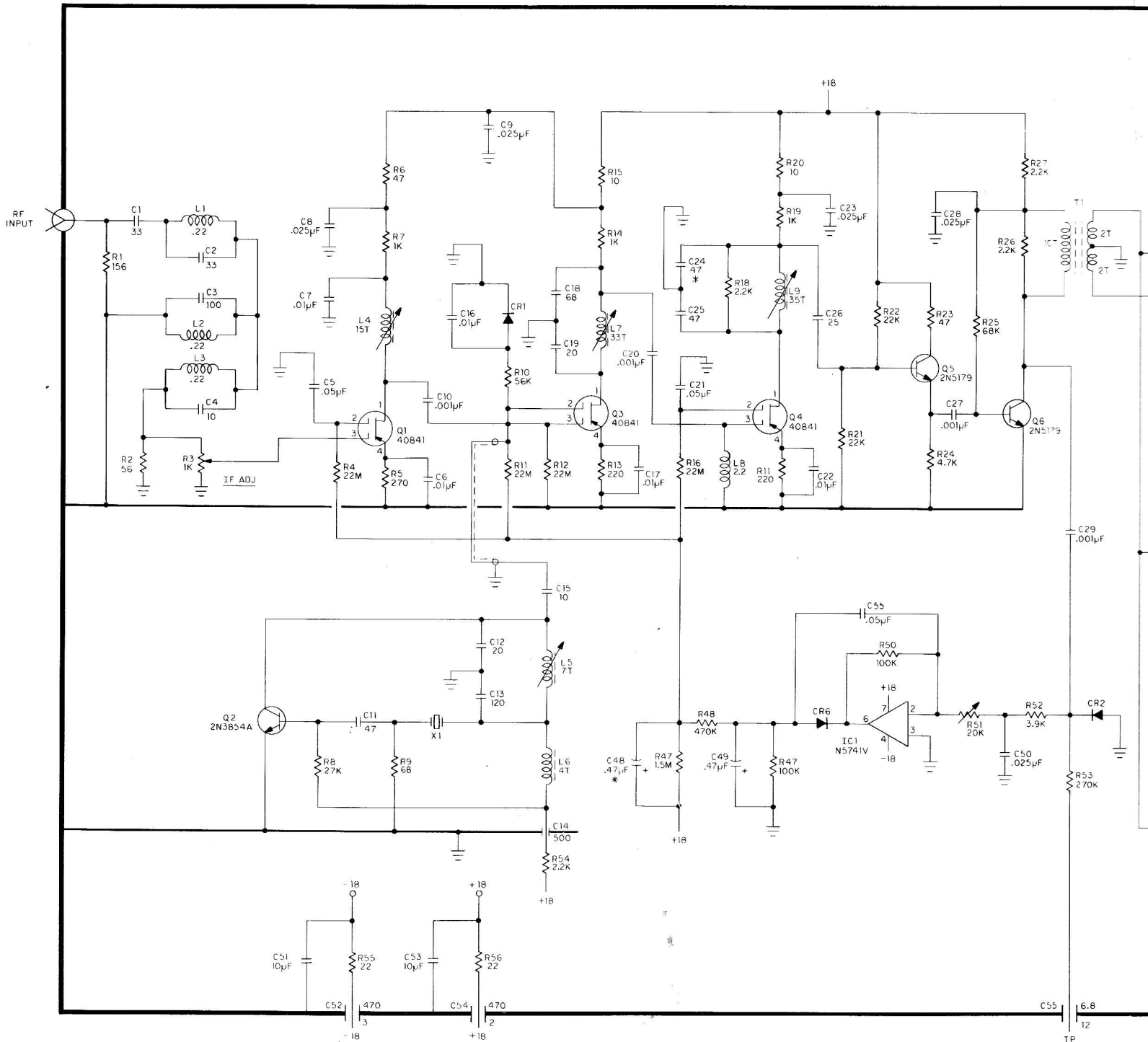
RF INPUT
C1 33
L1 .22
C2 33
R1 156
C3 100
L2 .22
L3 .22
C4 10
R2 56
R3 1K
IF ADJ
C8 .025μF
R6 47
R7 1K
C7 .01μF
L4 15T
C5 .05μF
Q1 40841
R4 22M
R5 270
C6 .01μF
C9 .025μF
C16 .01μF
CR1
C10 .001μF
R10 56K
R11 22M
R12 22M
C18 68
C19 20
L7 33T
C20 .001μF
Q3 40841
R13 220
C17 .01μF
R15 10
R14 1K
+18
R20 10
R19 1K
C23 .025μF
C24 47 *
C25 47
R18 2.2K
L9 35T
C26 25
C21 .05μF
Q4 40841
R16 22M
L8 2.2
R11 220
C22 .01μF
R21 22K
R22 22K
R23 47
Q5 2N5179
C27 .001μF
R24 4.7K
C28 .025μF
R25 68K
Q6 2N5179
R27 2.2K
R26 2.2K
T1
10T
2T
2T
C29 .001μF
C15 10
C12 20
L5 7T
C13 120
Q2 2N3854A
C11 47
X1
R8 27K
R9 68
L6 4T
C14 500
R54 2.2K
+18
C55 .05μF
R50 100K
+18
R48 470K
CR6
IC1 N5741V
-18
R51 20K
R52 3.9K
CR2
C50 .025μF
R53 270K
C48 .47μF *
R47 1.5M
C49 .47μF
R47 100K
+18
-18
+18
C51 10μF
R55 22
C53 10μF
R56 22
C52 470
C54 470
C55 6.8
3
2
12
-18
+18
TP

M7E
L.O. TRACKING MARKER

REV. C

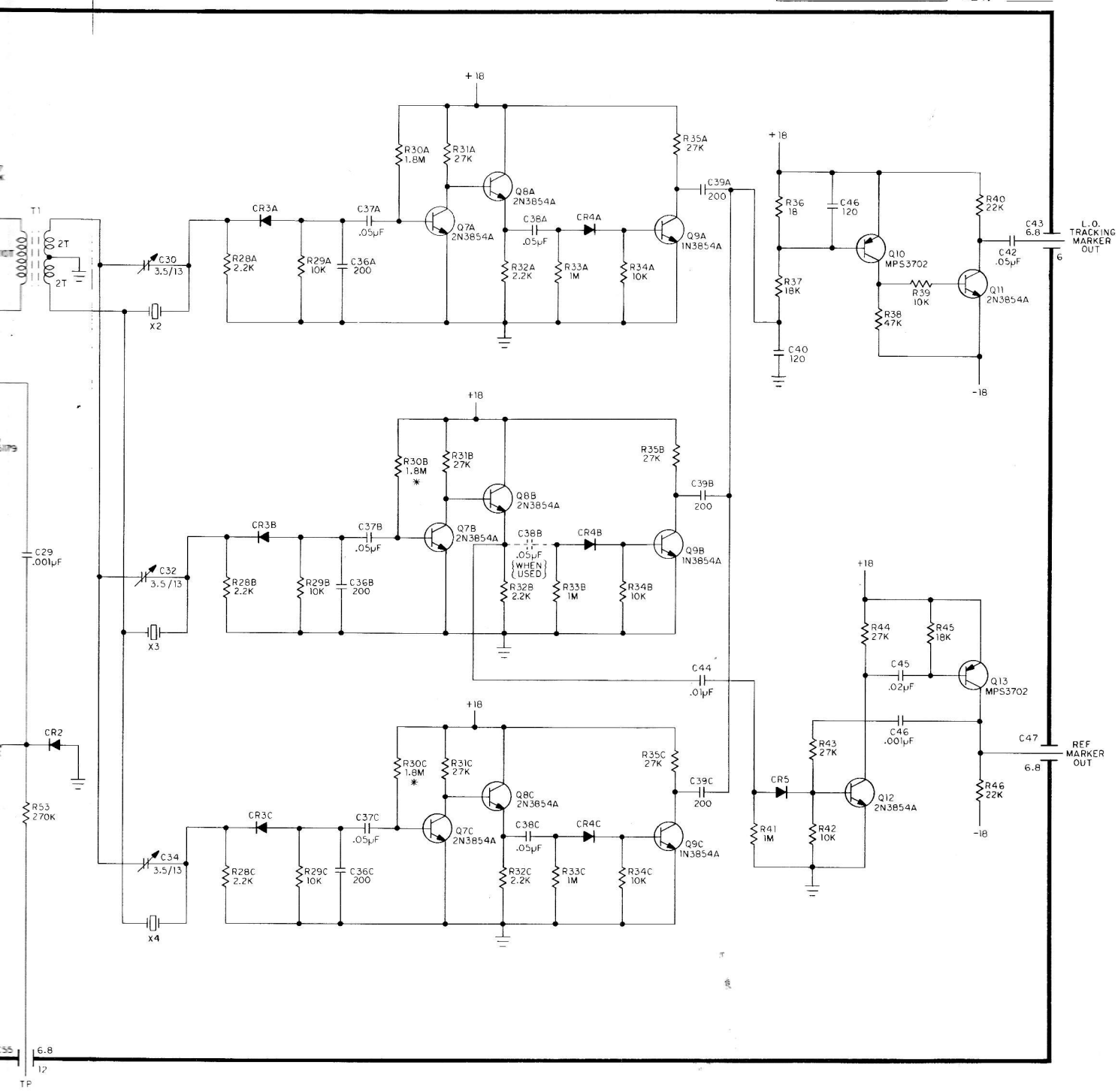

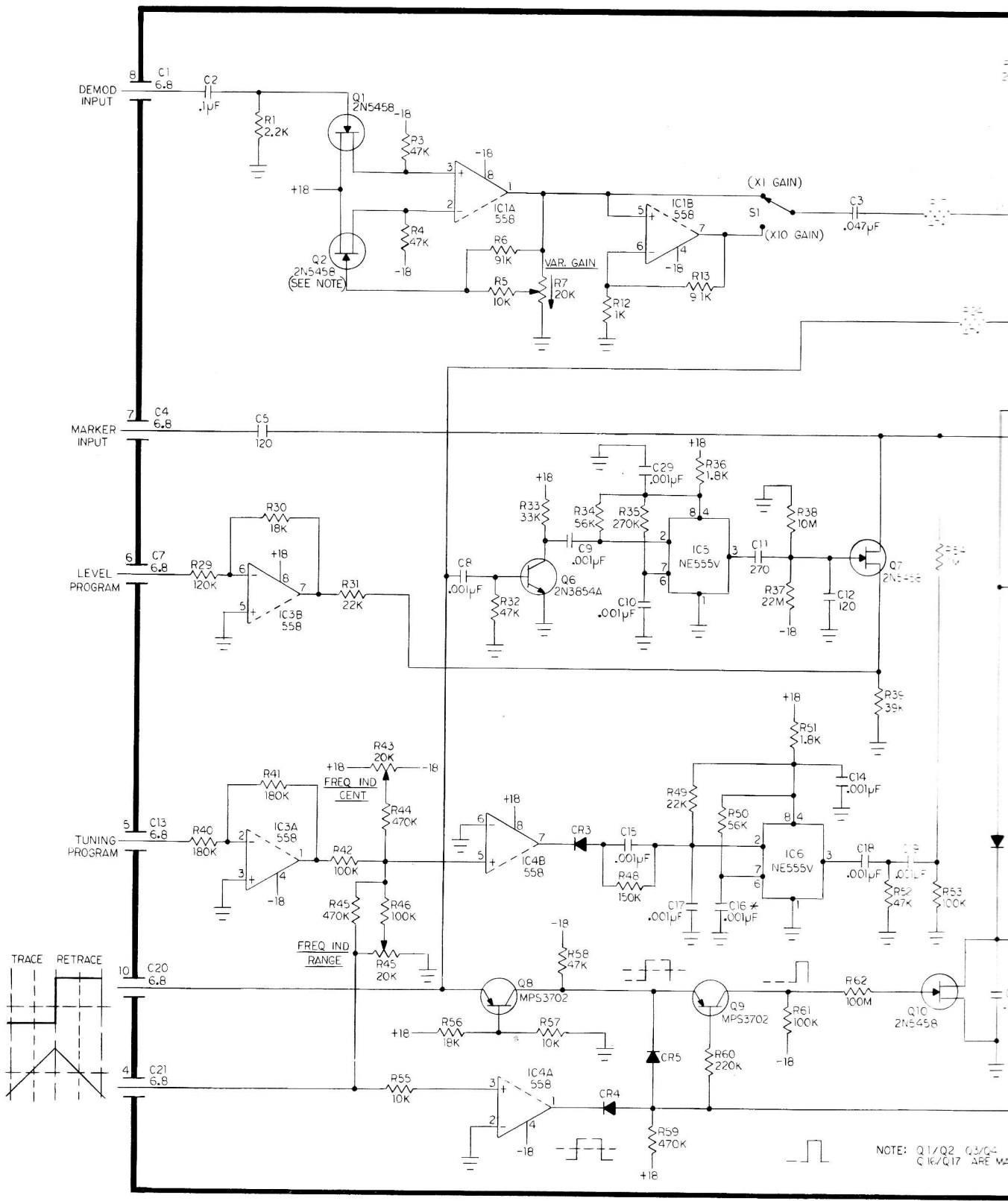
DEMOD INPUT
MARKER INPUT
LEVEL PROGRAM
TUNING PROGRAM
TRACE
RETRACE
C1 6.8
C2 .1μF
R1 2.2K
Q1 2N5458
Q2 2N5458 (SEE NOTE)
R3 47K
R4 47K
IC1A 558
IC1B 558
(X1 GAIN)
(X10 GAIN)
S1
C3 .047μF
R6 91K
R5 10K
R7 20K
VAR. GAIN
R12 1K
R13 9.1K
C4 6.8
C5 120
C7 6.8
R29 120K
R30 18K
IC3B 558
R31 22K
C8 .001μF
R32 47K
R33 33K
R34 56K
R35 270K
C9 .001μF
Q6 2N3654A
C10 .001μF
C29 .001μF
R36 1.8K
IC5 NE555V
C11 270
R37 22M
R38 10M
C12 120
Q7 2N5458
R39 39K
C13 6.8
R40 180K
R41 180K
IC3A 558
R42 100K
R43 20K
FREQ IND CENT
R44 470K
R45 470K
R46 100K
R45 20K
FREQ IND RANGE
IC4B 558
CR3
C15 .001μF
R48 150K
R49 22K
R50 56K
R51 1.8K
C14 .001μF
IC6 NE555V
C17 .001μF
C16 .001μF
C18 .001μF
C19 .001μF
R52 47K
R53 100K
C20 6.8
C21 6.8
R58 47K
Q8 MPS3702
Q9 MPS3702
R56 18K
R57 10K
R55 10K
IC4A 558
CR4
CR5
R59 470K
R60 220K
R61 100K
R62 100M
Q10 2N5458
NOTE: Q1/Q2 Q3/Q4
Q16/Q17 ARE MA

M8E
AUTO LEVEL & SCOPE INDICATOR

REV. H

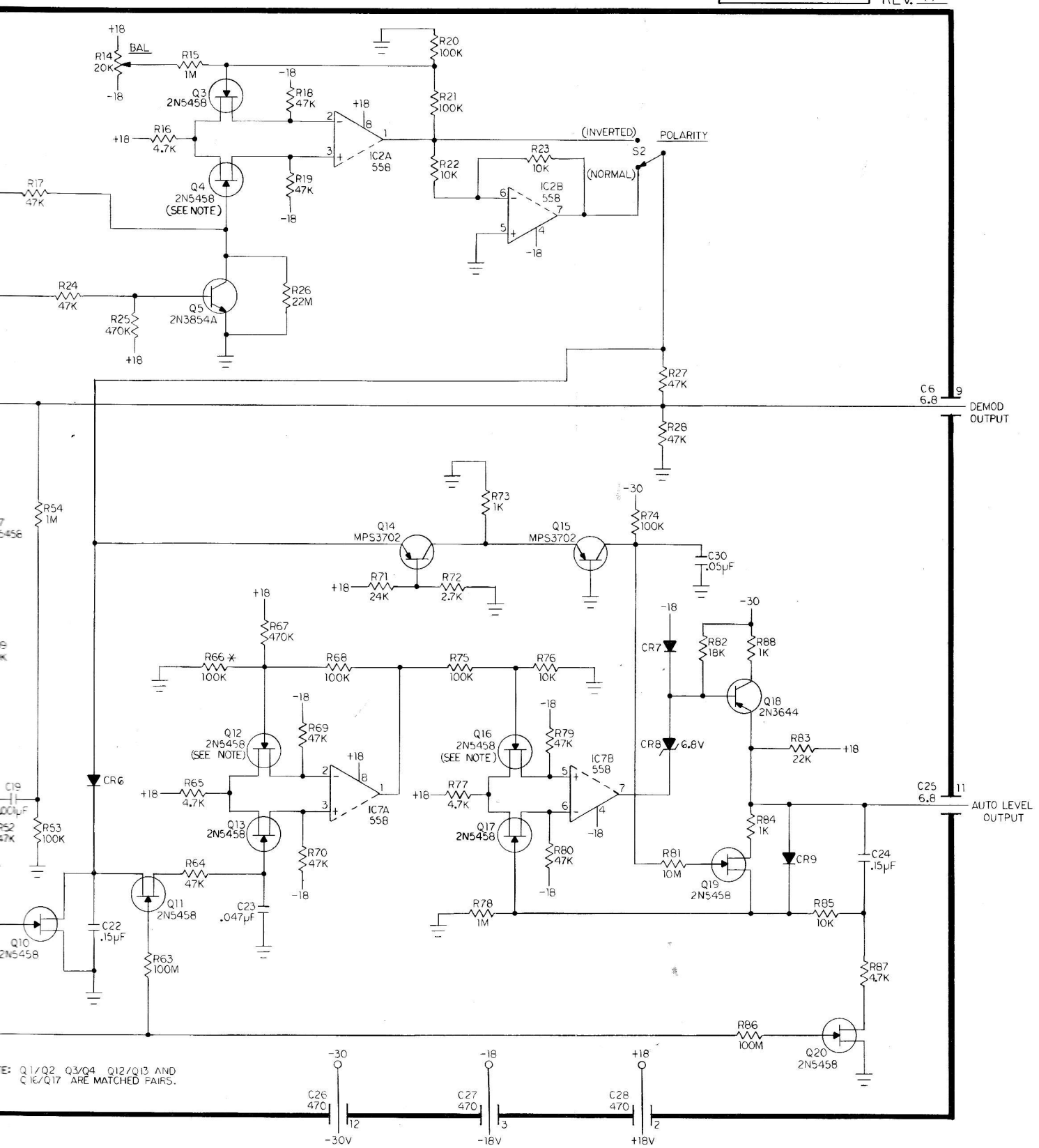

NOTE 1: FOR Z OF 50Ω, R74 IS CHANGED TO 50 AND THE 'A' SUFFIX IS DROPPED FROM THE MODULE NUMBER

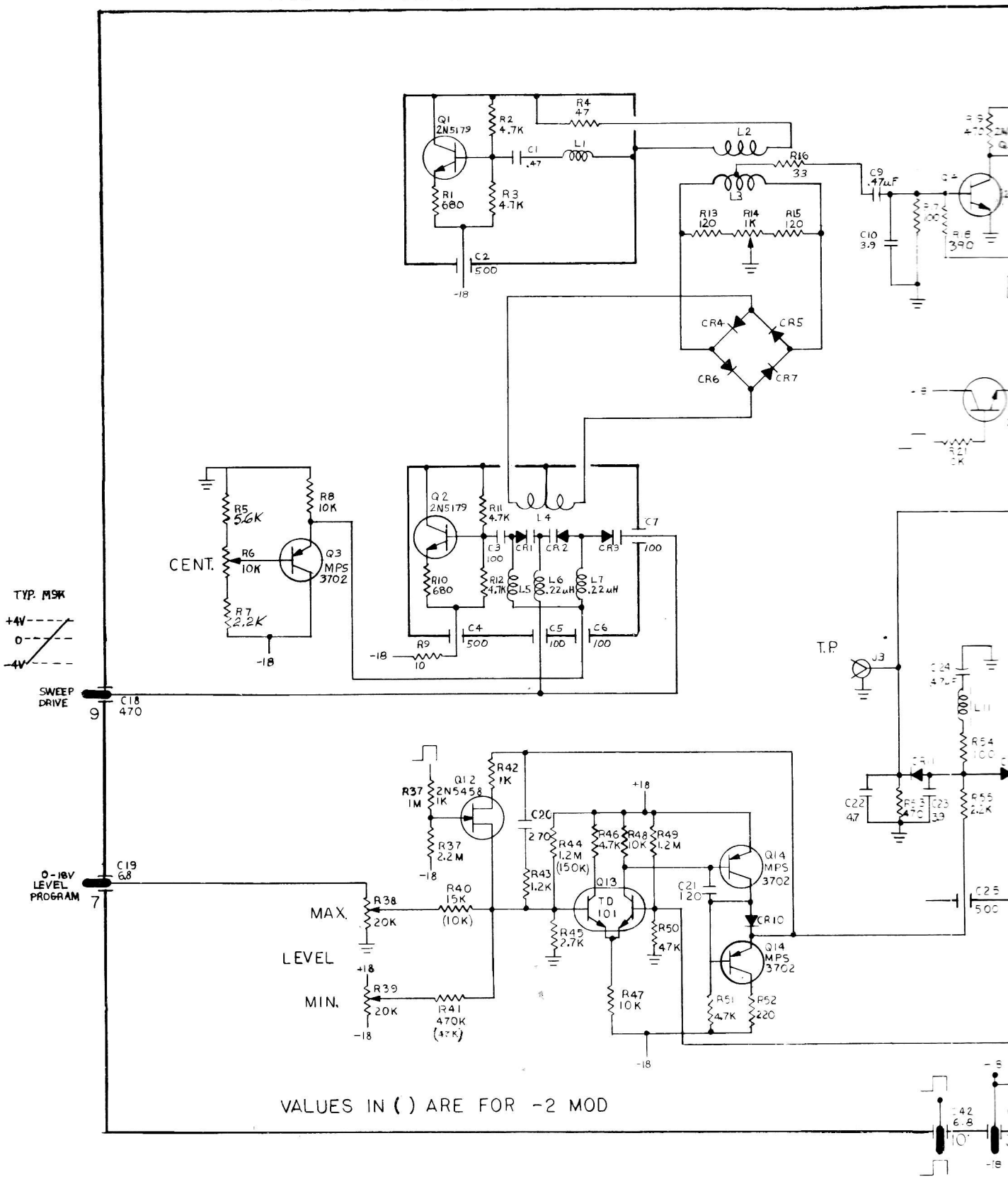

M9JA, M9KA SWEEP OSCILLATOR

REV D

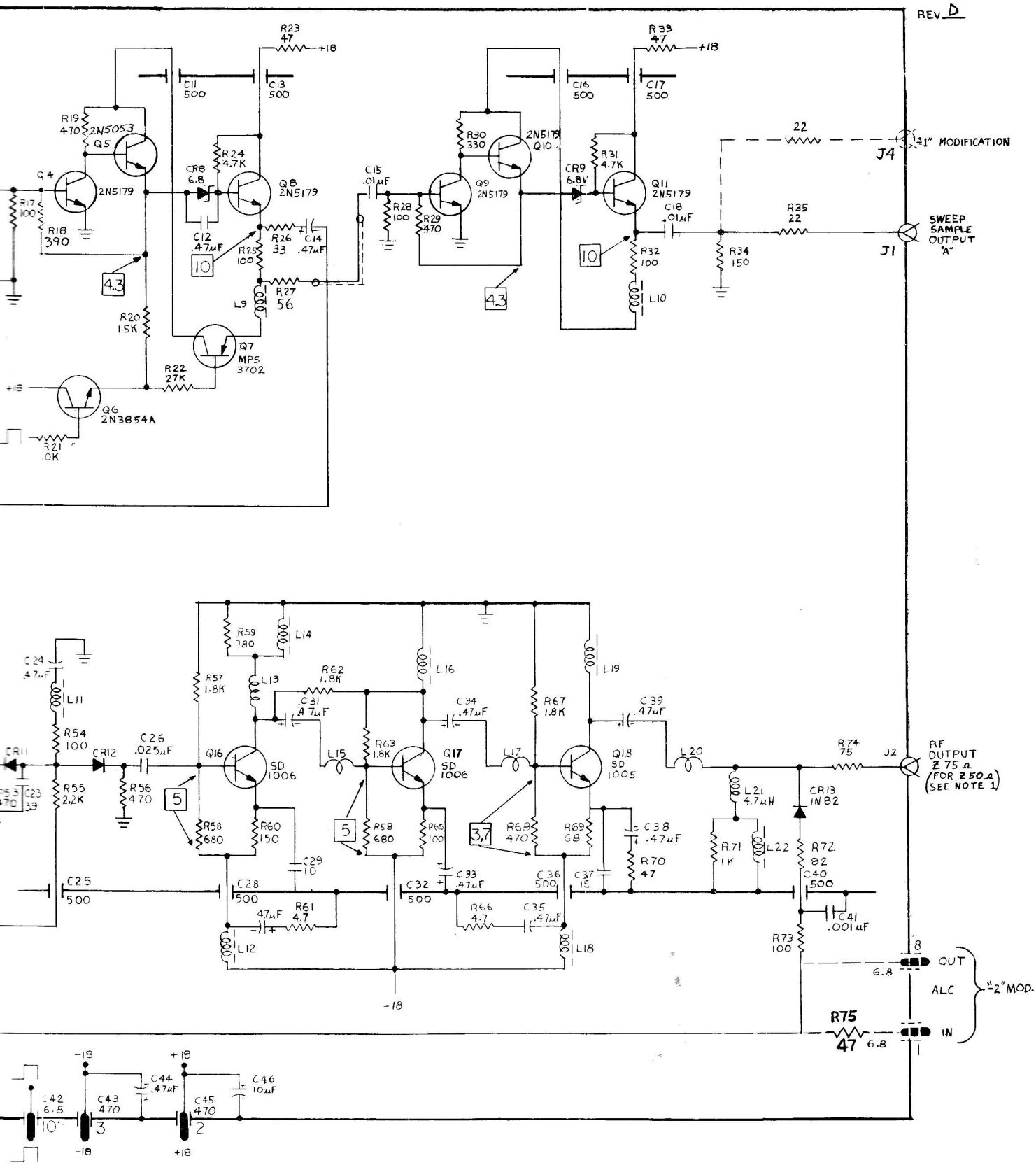

NOTE 1: AVAILABLE 500 TO 1000 MHz RANGE BY ADJUSTING LEAD LENGTHS IN OSC. COMPARTMENT
NOTE 2: "-1" VERSION = OMITS CKT. FOR EXTERNAL MONITOR. PINS 4, 5 & 8 ARE OMITTED AND UNIT IS WIRED AS SHOWN IN - —— - LINES
NOTE 3: "A" VERSION = CHANGES OUTPUT IMPEDANCE TO 75 Ω PARTS AFFECTED ARE R8 AND J2. (SEE PARTS LIST)
NOTE 4: Q6 AND Q7 UNASSIGNED

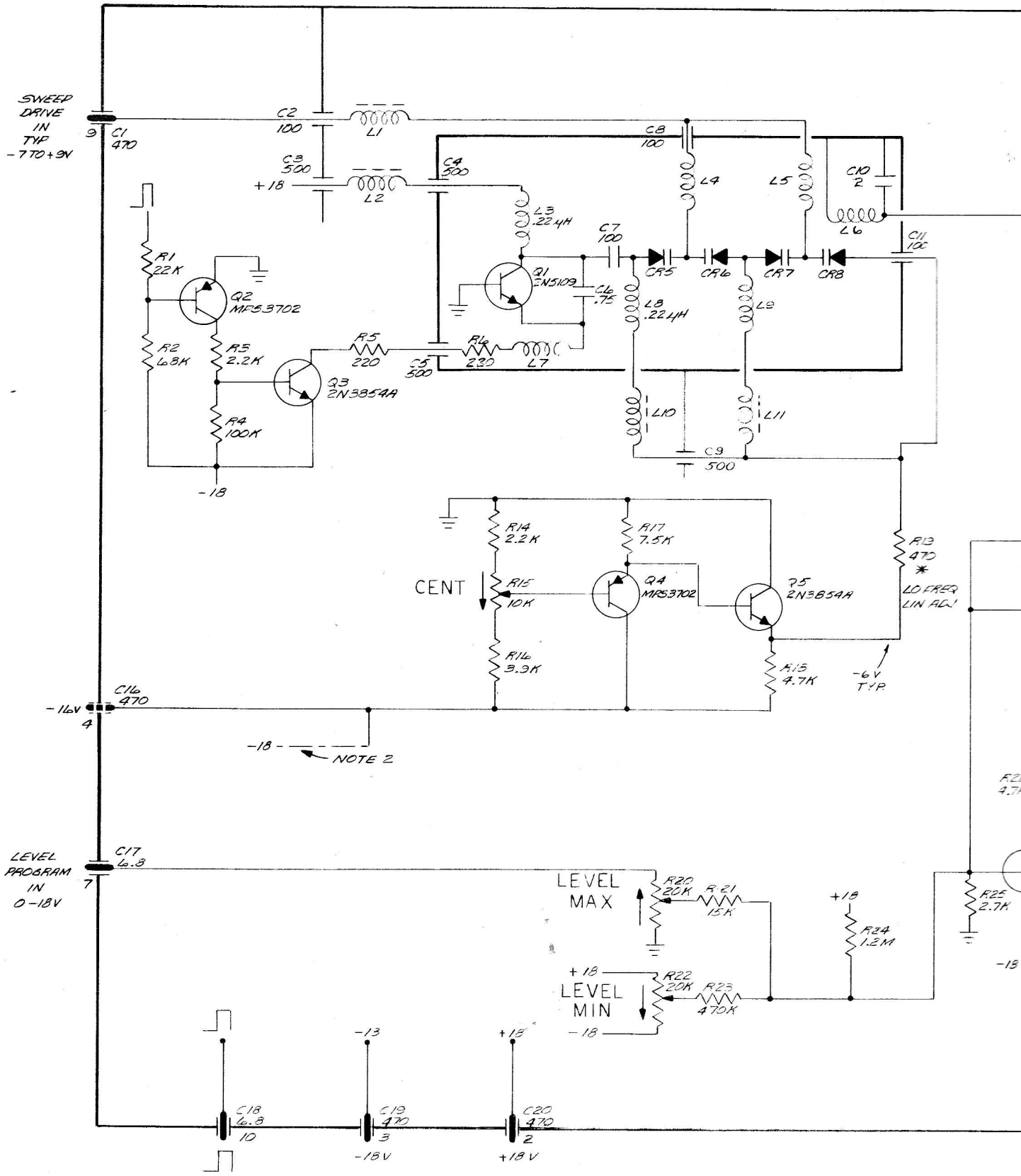

M9S, M9S-1, M9S-A
SWEEP OSCILLATOR

REV D

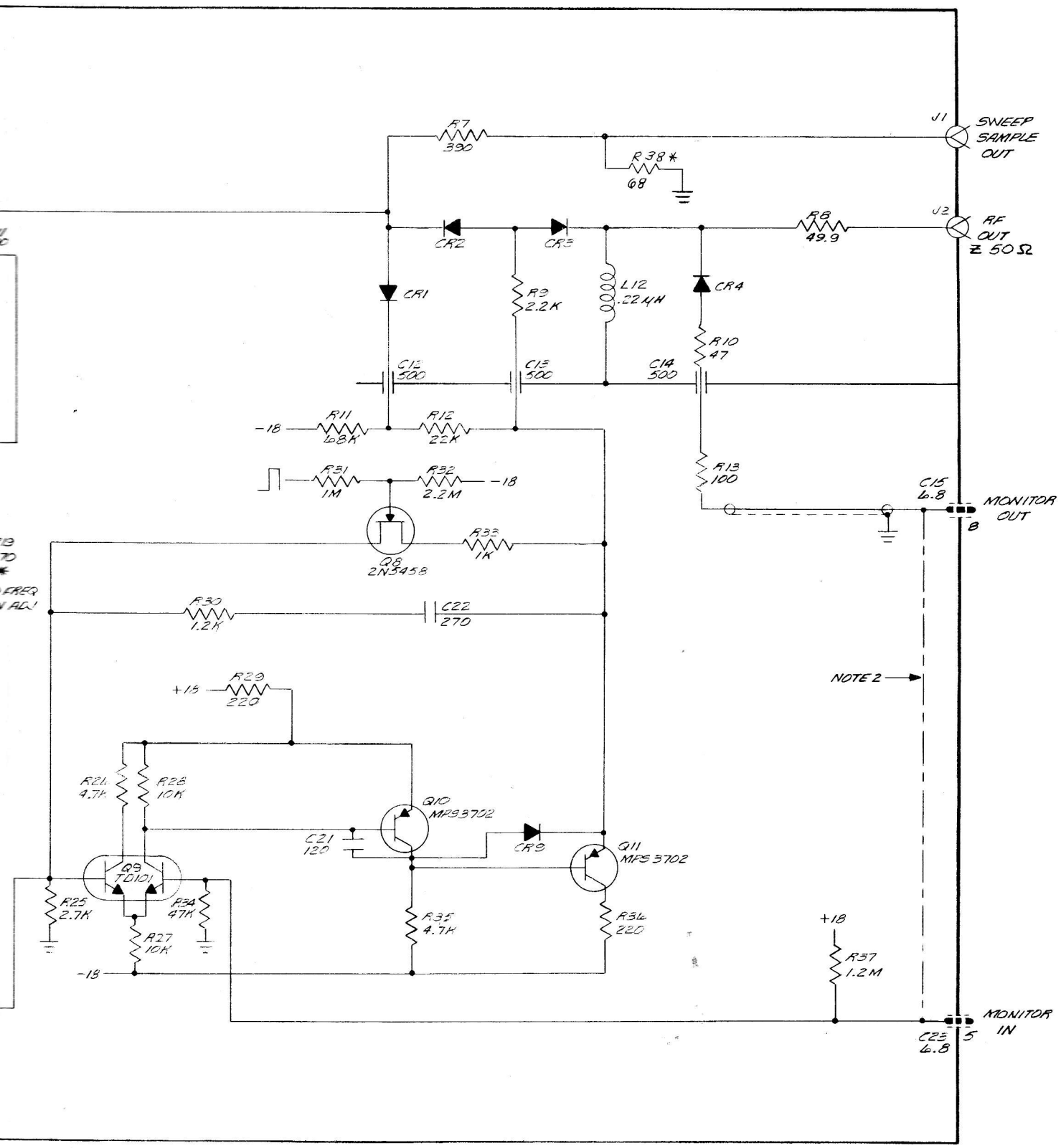

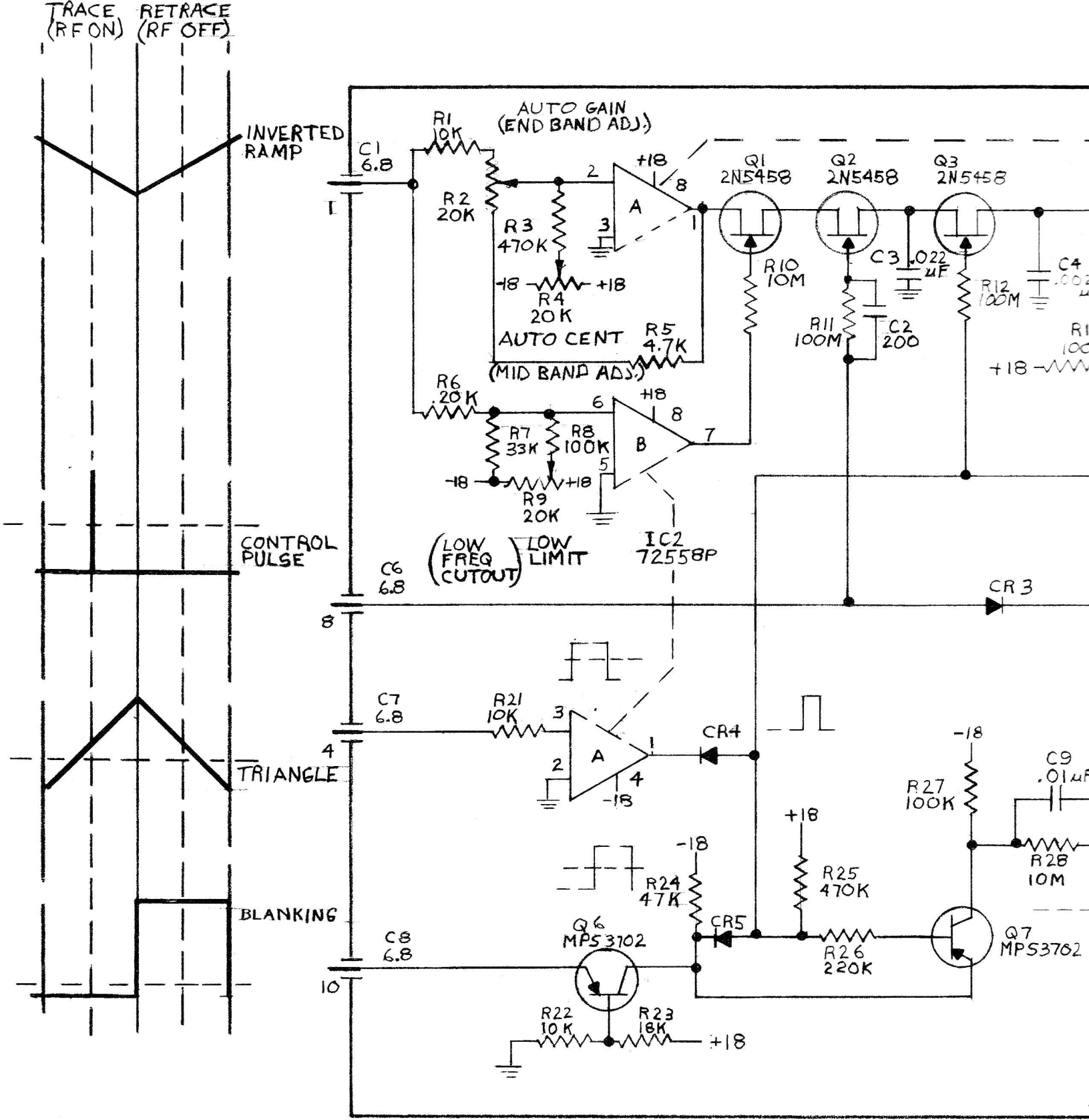
TRACE (RF ON)
RETRACE (RF OFF)
INVERTED RAMP
CONTROL PULSE
TRIANGLE
BLANKING
AUTO GAIN (END BAND ADJ.)
R1 10K
R2 20K
R3 470K
R4 20K
AUTO CENT
R5 4.7K
(MID BAND ADJ.)
R6 20K
R7 33K
R8 100K
R9 20K
C1 6.8
C6 6.8
C7 6.8
C8 6.8
Q1 2N5458
Q2 2N5458
Q3 2N5458
R10 10M
R11 100M
C2 200
C3 .022 µF
R12 100M
C4
IC2 72558P
(LOW FREQ CUTOUT)
LOW LIMIT
CR3
CR4
CR5
R21 10K
R24 47K
R25 470K
R26 220K
R27 100K
C9 .01µF
R28 10M
Q6 MPS3702
Q7 MPS3702
R22 10K
R23 18K
+18
-18

M11E
AUTO/FREQUENCY
OPTION E

REV. E

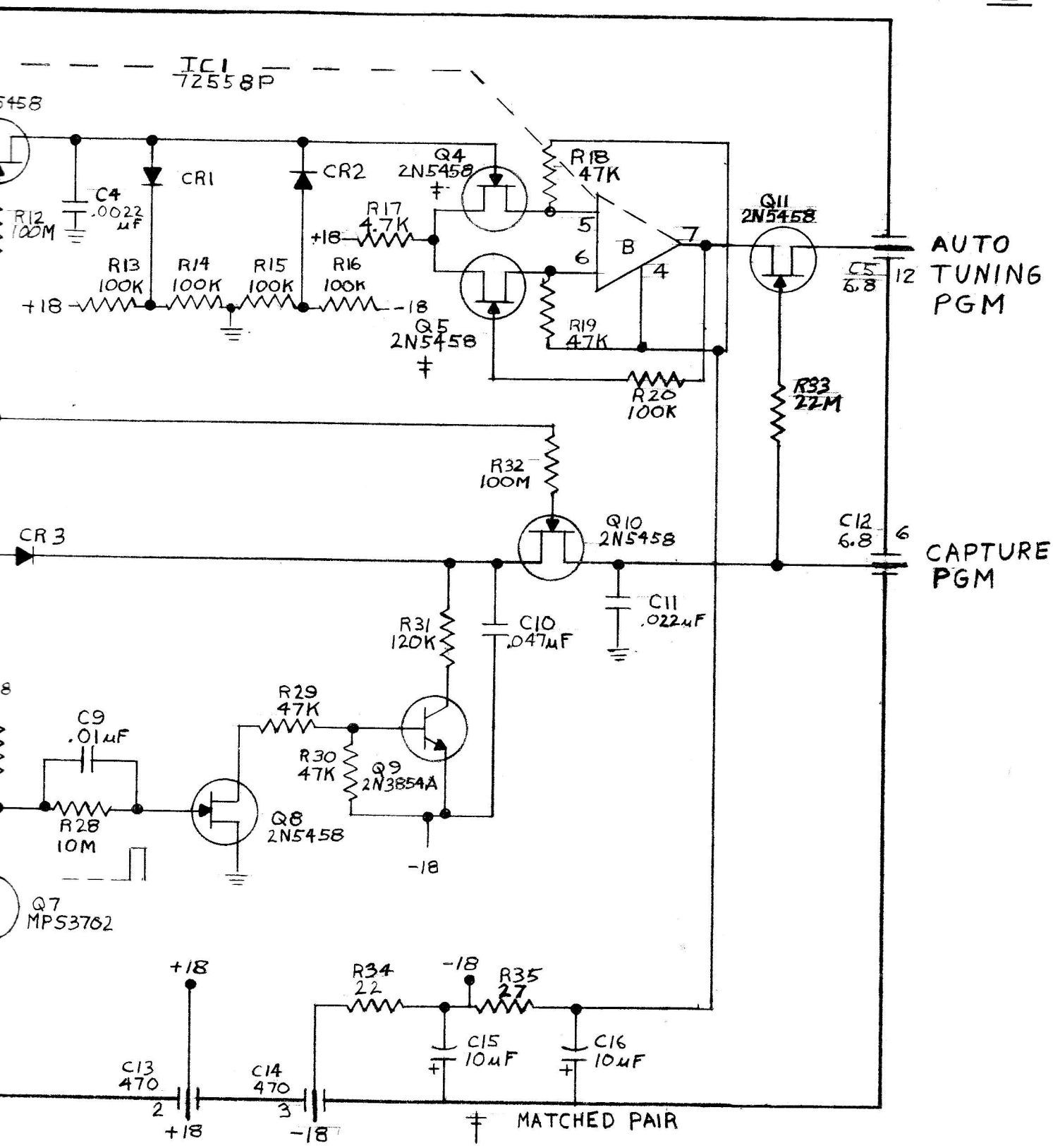

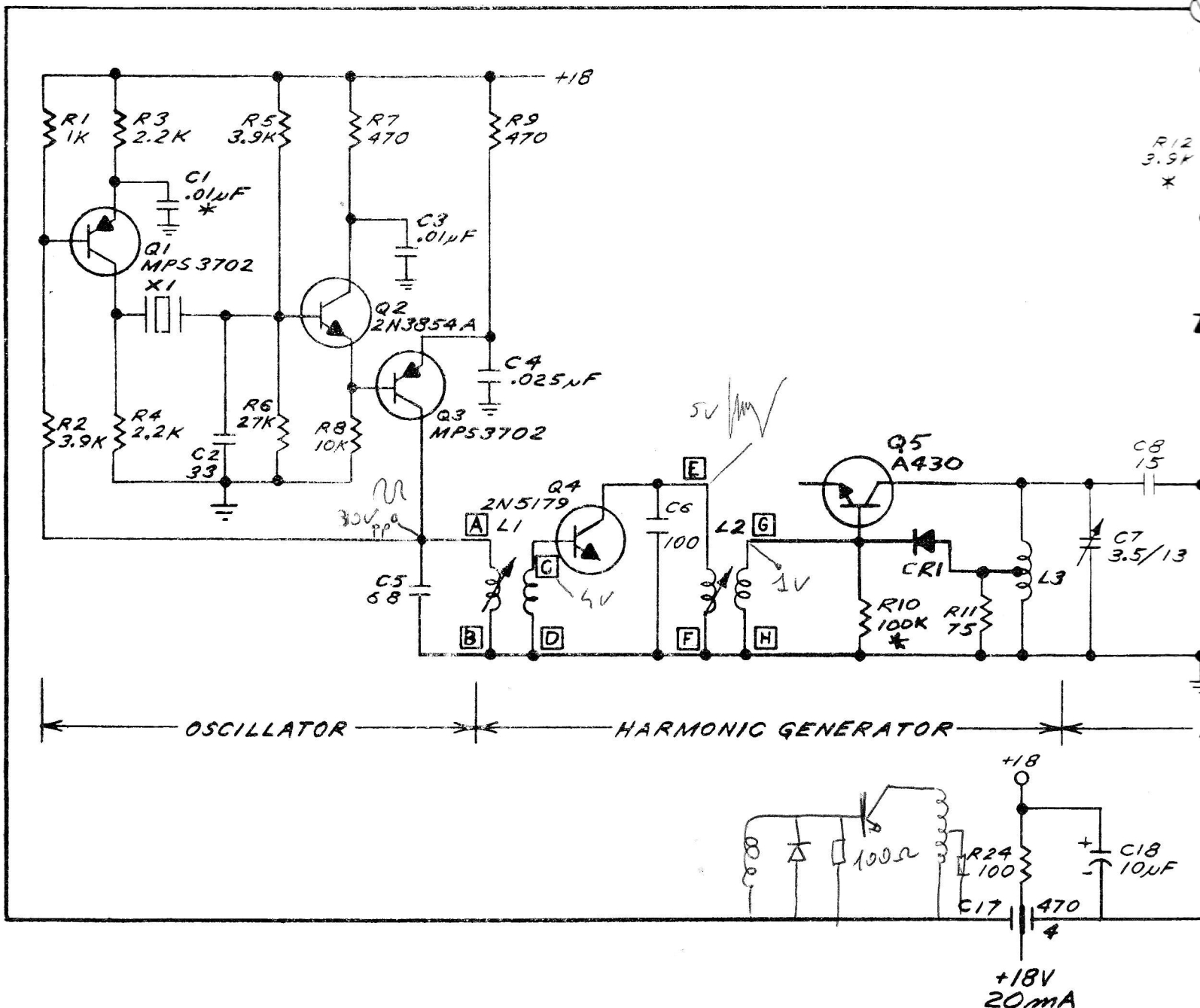
+18
R1 1K
R3 2.2K
R5 3.9K
R7 470
R9 470
C1 .01μF *
C3 .01μF
Q1 MPS 3702
X1
Q2 2N3854A
C4 .025μF
Q3 MPS3702
R2 3.9K
R4 2.2K
R6 27K
R8 10K
C2 33
C5 68
30V pp
A
B
C
D
E
F
G
H
L1
L2
Q4 2N5179
C6 100
5V
4V
1V
Q5 A430
CR1
R10 100K *
R11 75
L3
C7 3.5/13
C8 15
R12 3.9K *
OSCILLATOR
HARMONIC GENERATOR
100Ω
R24 100
C17 470 4
C18 10μF
+18V 20mA

M6H-1
HARMONIC MARKER
(1 MHZ)

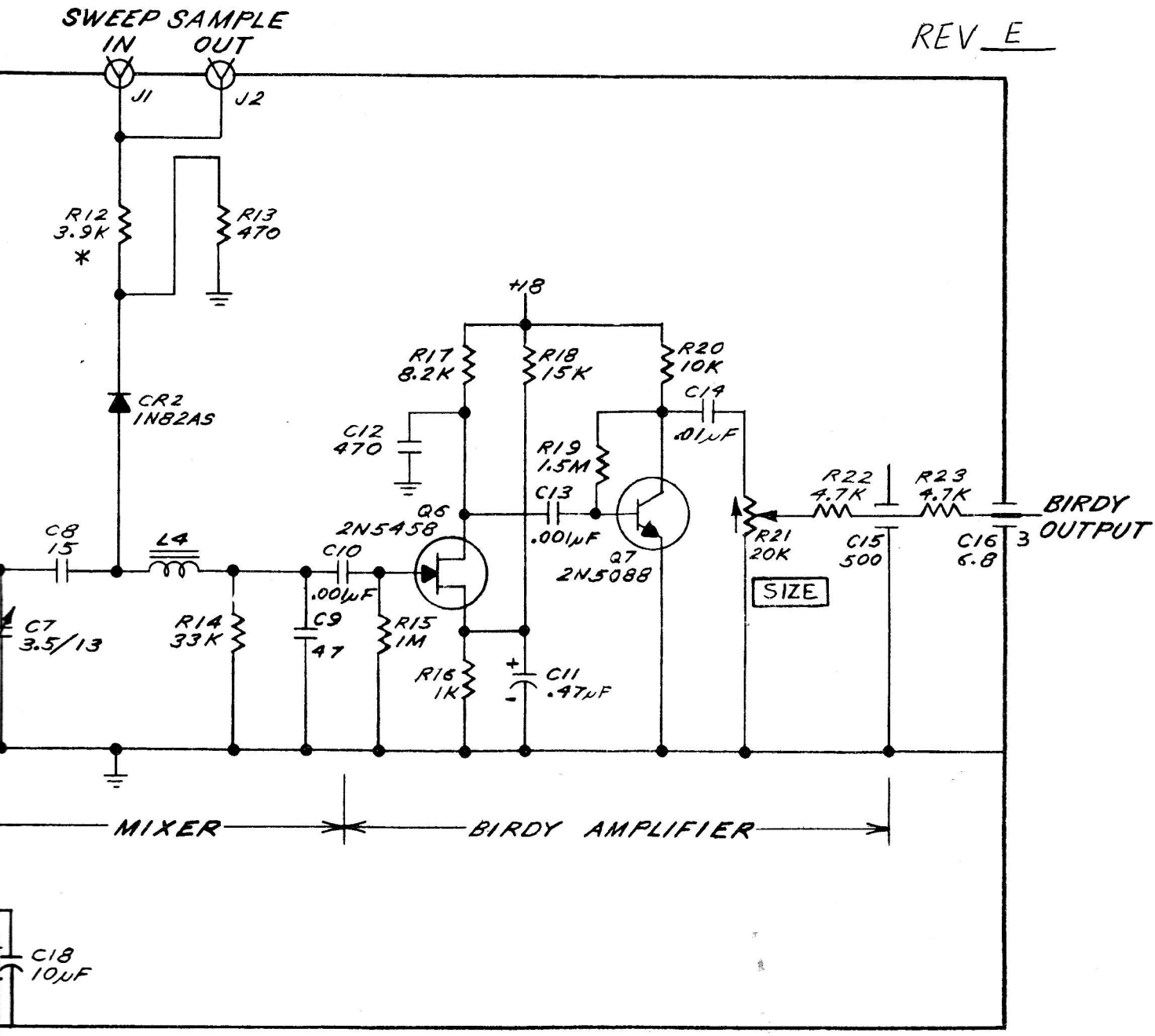

4 SPIRE SU FERRITE
Ø 0,3 (FILO SMALT)

L4 =

L3 = FILO SMG. 0,7
1 SPIRE SU 3 mm

L1 = 10 SP. SU Ø 5,5 (P)
FILO Ø 0,7 SMALT
1 SP. (S)

M6H-5-50
HARMONIC MARKER
(5-50 MHZ)

× 50 MHZ
C1 = 56 pF
C2 = 18 pF
× 10 MHZ
C1 = 220 pF
C2 47 pF

REV D

BF 256 B

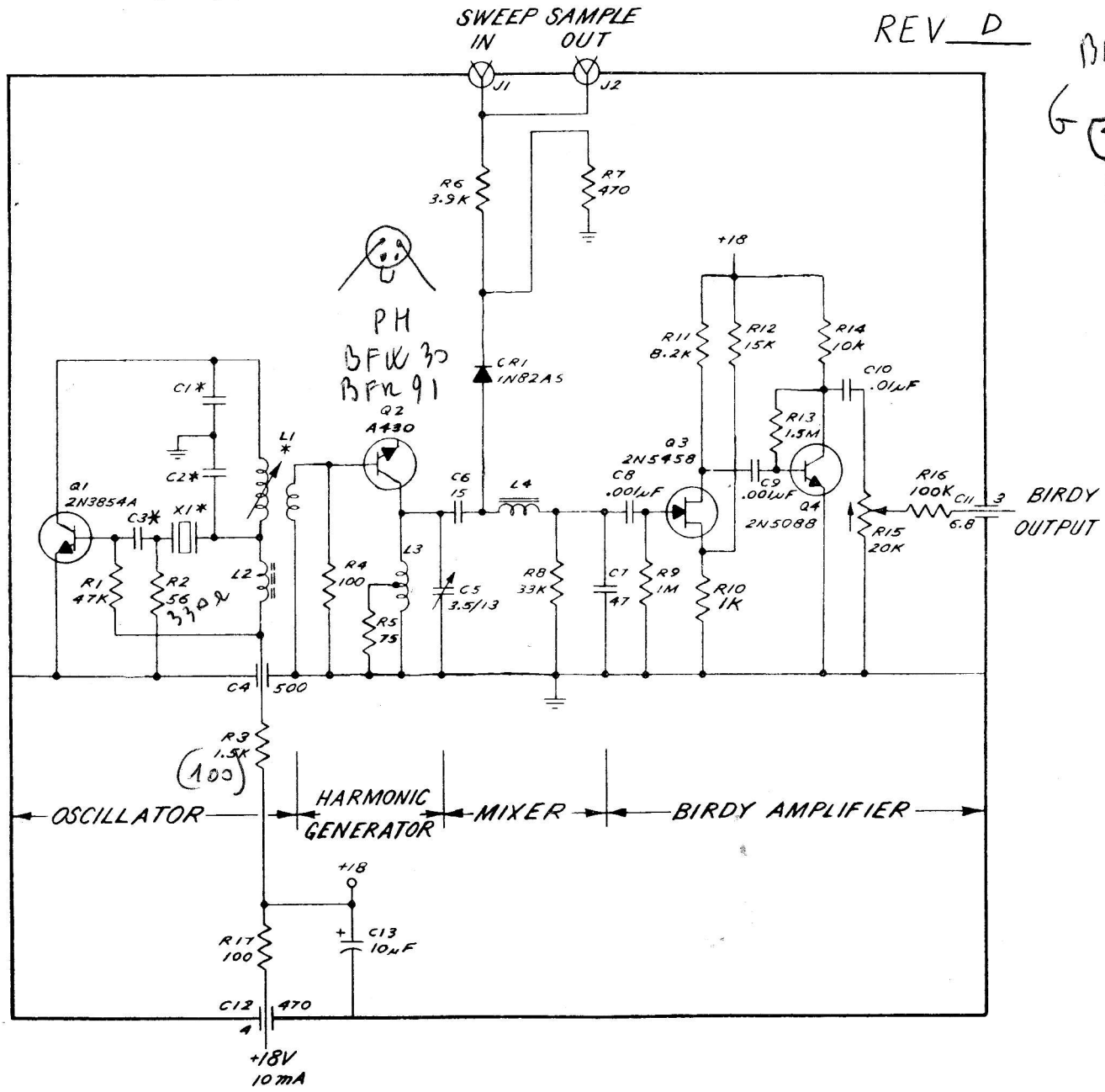

M6S
SINGLE FREQ.
MARKER

REV A

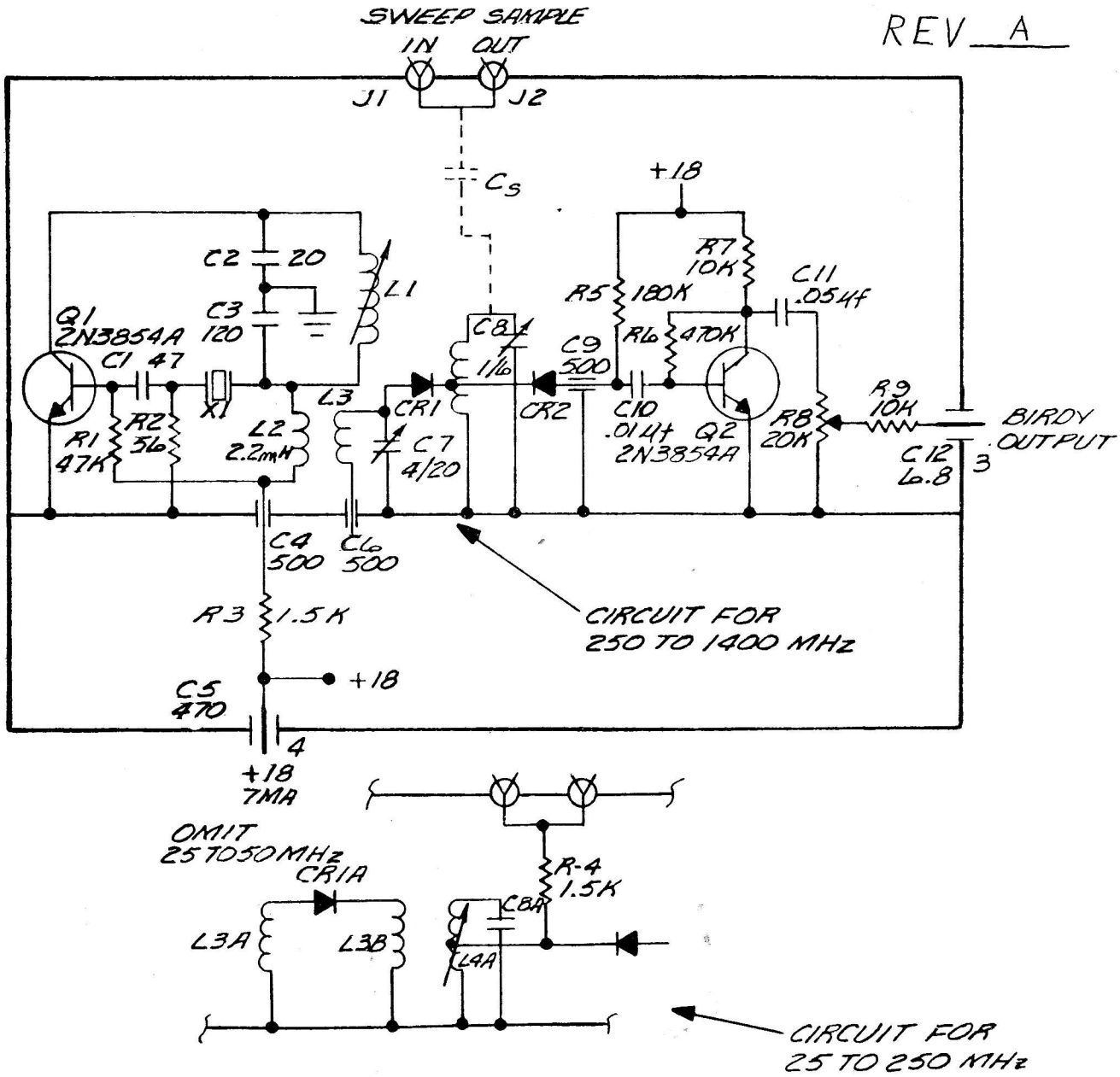

RB PROBE

REV. A

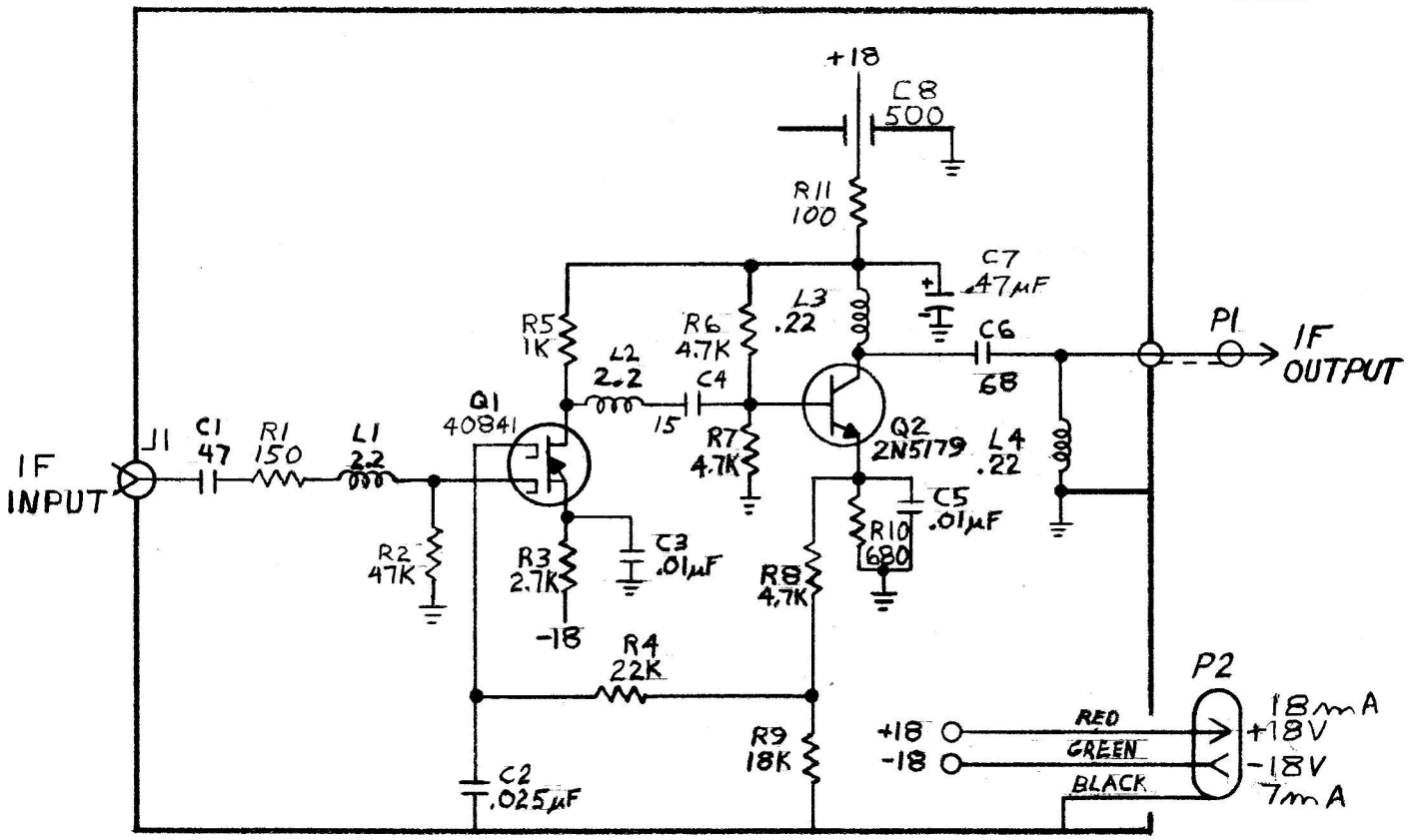

The Marker Adder module in this instrument has been redesigned. It is now built on a PC board instead of a metal chassis, and some discrete components have been replaced by integrated circuits. All instrument specifications and operating procedures are unchanged.